PENTAIR

Section: 1000
I.O.M.: 1951
Issued: 05/15
Replaces: 12/04

PENBERTHY®

Jet Pumps

Models GL, GH - *Gas Operated*

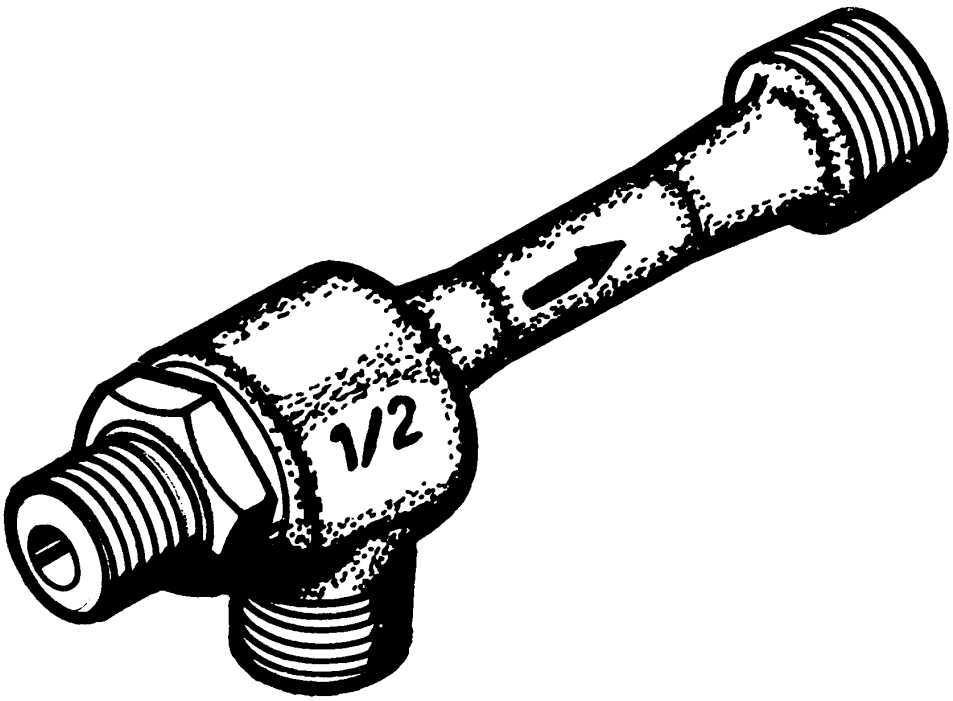

Installation, Operation and Maintenance Instructions

TABLE OF CONTENTS

TABLES AND FIGURES page

PENBERTHY PRODUCT WARRANTY

Pentair Valves & Controls Black Mountain warrants its Penberthy products as designed and manufactured by PV&C Black Mountain to be free of defects in the material and workmanship for a period of one year after the date of installation or eighteen months after the date of manufacture, whichever is earliest. PV&C Black Mountain will, at its option, replace or repair any products which fail during the warranty period due to defective material or workmanship.

Prior to submitting any claim for warranty service, the owner must submit proof of purchase to PV&C Black Mountain and obtain written authorization to return the product. Thereafter, the product shall be returned to PV&C in Black Mountain, North Carolina, with freight paid.

This warranty shall not apply if the product has been disassembled, tampered with, repaired or otherwise altered outside of PV&C Black Mountain factory, or if it has been subject to misuse, neglect or accident.

The responsibility of PV&C Black Mountain hereunder is limited to repairing or replacing the product at its expense. PV&C Black Mountain shall not be liable for loss, damage or expenses related directly or indirectly to the installation or use of its products, or from any other cause or for consequential damages. It is expressly understood that PV&C Black Mountain is not responsible for damage or injury caused to other products, buildings, personnel or property, by reason of the installation or use of its products.

THIS IS PV&C BLACK MOUNTAIN'S SOLE WARRANTY AND IN LIEU OF ALL OTHER WARRANTIES, EXPRESSED OR IMPLIED WHICH ARE HEREBY EXCLUDED, INCLUDING IN PARTICULAR ALL WARRANTIES OF MERCHANTABILITY OR FITNESS FOR A PARTICULAR PURPOSE.

This document and the warranty contained herein may not be modified and no other warranty, expressed or implied, shall be made by or on behalf of PV&C Black Mountain unless made in writing and signed by the General Manager or Director of Engineering of PV&C Black Mountain.

INSTALLATION, OPERATION and MAINTENANCE MANUAL FOR PENBERTHY MODELS GL & GH JET PUMPS

1.0 About the Manual

This manual has been prepared as an aid and guide for personnel involved in installation or maintenance. All instructions must be read and understood thoroughly before attempting any installation, operation or maintenance.

WARNING

Failure to follow *any* instruction could possibly result in a malfunction of the jet pump with resulting sudden release of pressure, property damage or severe physical injury.

IMPORTANT: Penberthy does not have any control over the manner in which its jet pump is handled, installed or used. Penberthy cannot and will not guarantee that a jet pump is suitable or compatible for the user's specific application.

2.0 Introduction

2.1 Features and Specifications

Penberthy gas operated jet pump models GL and GH are designed primarily for exhausting, evacuating, and priming using steam or air as the operating medium; and for pumping water using steam as the operating medium. They can also be used with other gases as the operating medium.

2.2 Design Ratings at Maximum and Minimum Operating Temperatures

MATERIAL	BODIES	NOZZLES
Iron	80 psig [550 kPaG] at -20°F [-29°C] to +150°F [66°C] 50 psig [340 kPaG] at +350°F [177°C]	200 psig [1380 kPaG] at -20°F [-29°C] to +400°F [204°C]
Bronze	200 psig [1380 kPaG] at -20°F [-29°C] to +150°F [66°C] 125 psig [860 kPaG] at +400°F [204°C]	200 psig [1380 kPaG] at -20°F [-29°C] to +400°F [204°C]
316 STS	200 psig [1380 kPaG] at -150°F [-101°C] to +150°F [66°C] 125 psig [860 kPaG] at +400°F [204°C]	200 psig [1380 kPaG] at -150°F [-101°C] to +400°F [204°C]

Table 1

To determine the maximum allowable working pressure for a specific temperature within the design limits stated above, the user should refer to Penberthy dimension sheets, or when provided, the specifically stated design limits on a Penberthy product proposal.

2.3 Application Data

The model GL is intended to operate between 60 psig (410 kPaG) and 150 psig (1030 kPaG) steam pressure against moderate or zero discharge head. The model GH is intended to operate between 20 psig (140 kPaG) and 150 psig (1030 kPaG) steam pressure against moderate to substantial discharge head.

Note: For specific application data within the above ranges, the user should consult the Penberthy product proposal for the specific model and size jet pump, or should request Penberthy to supply the applicable technical data bulletin.

WARNING

Under no circumstances should these design ratings or application data be exceeded. Exceeding design ratings or application data may cause bursting of steam jet pump, discharge of live steam, objectionable noise and vibration, loosening of joints, leaks and suction flow reversal, resulting in severe physical injury or property damage.

3.0 Inspection and Performance Confirmation

3.1 Receiving Inspection

Upon receipt of jet pump, check all components carefully for damage incurred in shipping. If damage is evident or suspected, do not attempt any installation. Notify carrier immediately and request damage inspection.

3.2 User's Rating Inspection

The user should confirm that:

1. The jet pump size (cast on side of body) and model designation (stamped on nozzle hex flats) conforms to the description on the user's purchase order.

2. The operating conditions described in the purchase order agree with the actual operating conditions at the installation site.

3. The actual operating conditions at the installation site are within the applications data shown on the Penberthy Technical Data Bulletin or product proposal referred to above.

4. The materials of construction of the jet pump are compatible with both the contained fluid and the surrounding atmosphere in the specific application.

SAFETY INSTRUCTIONS

If the size, model or performance data of the jet pump as received does not conform with any of the criteria above, do not proceed with installation. Contact an authorized Penberthy distributor for direction on how to proceed.

4.0 Installation

Note: The user should refer to Penberthy dimension sheets or Penberthy product proposal to obtain dimensional information for specific size and model jet pump.

Check the exploded view Figure 3 for the location of operating, suction and discharge connections to insure correct hook up.

4.1 Effect of Related Piping and Precautions

1. Penberthy gas operated jet pump models GL and GH may be installed and operated in any position.

2. Jet pumps should be installed with pipe and fittings which provide minimum resistance to fluid flow. Pipe line friction losses must always be a consideration when estimating jet pump performance.

3. It is recommended that provisions be made for pressure gage connections near the inlet, suction and discharge connections of the jet pump. If operating difficulties are encountered at any time, it may become necessary to install pressure gages to identify the problem.

4. Steam must not have over 20°F (-7°C) of superheat, or performance will differ from that published on Penberthy Technical Data Bulletin or product proposal referred to above.

5. When pumping liquids, suction piping should be sized so that the velocity of the liquid does not exceed 4 feet per second. This is almost always automatically obtained when the suction line is the same pipe size as the suction connection.

6. Install a valve in the suction line if it is desirable to:

    a. Prevent contamination of suction fluid by the motive fluid at start up.
    b. Prime a centrifugal pump.
    c. Throttle suction flow.

7. When a gas operated jet pump is used to lift liquids by suction or vacuum, the jet pump should be located as close to the level of the liquid as practical. However, any liquid entrained into the jet pump, *other than water when using steam as the operating medium,* may cause the jet pump to stop pumping, resulting in a possible suction flow reversal.

8. Discharge piping should be sized as short as possible and with the least number of turns and restrictions. Discharge piping friction losses must always be considered when estimating jet pump performance. Increase discharge line pipe size if necessary to minimize loss.

9. Do not impose system piping loads on a jet pump. The unit is *not* designed to be a load bearing fitting.

10. All piping should be clean and free of foreign materials which could clog the jet pump.

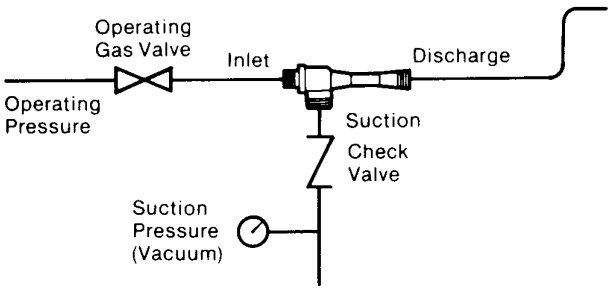

Figure 1
Typical Installation
Schematic Gas Operated
Pumping Gases

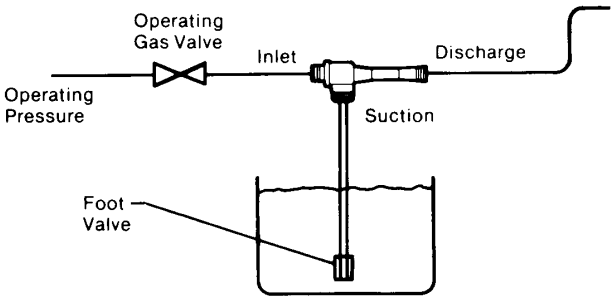

Figure 2
Typical Installation
Schematic Steam Operated
Pumping Water

5.0 Operation

5.1 Pre-Operational Check

1. Assure that all installation procedures have been completed.
2. Assure that any restrictions in the discharge line have been removed.
3. Assure that any discharge line valves are fully open.
4. Assure that suction line valve, if installed, is fully closed.

5.2 Operating

1. Open the motive valve quickly.
2. Open the suction line valve, if any.
3. Regulate the discharge pressure as desired, to a value within the capability published on Penberthy Technical Data Bulletin or product proposal referred to above.
4. For pump priming applications, when evacuation is completed, close the suction valve and immediately start the centrifugal pump. Then shut off the motive valve to the jet pump.

6.0 Maintenance

CAUTION

Maintenance should only be undertaken by qualified, experienced personnel who are familiar with this equipment and have read and understood all the instructions in this manual. Do not proceed with any maintenance unless the jet pump has been relieved of all pressure or vacuum, has been allowed to reach ambient temperature and has been drained or purged of all fluids. Failure to return to ambient conditions may result in personal injury or property damage.

6.1 Preventative Maintenance

The following items should be regularly monitored for purposes of maintenance:

1. Jet pump units for corrosion or debris build up
2. Piping and fittings for corrosion or debris build up
3. All connections for tightness
4. Strainers for debris build up

The user must determine upon evaluation of his or her own application and the factors stated above an appropriate maintenance schedule most suitable for his or her specific application.

6.2 Troubleshooting

Problem	Cause	Cure
The suction flow is less than expected	Suction piping is too restrictive	Remove restriction
	Discharge pressure is too high	Remove restriction
	Motive fluid pressure is lower than required	Increase pressure
	Suction liquid is much higher than ambient temperature	Lower temperature or size larger jet pump
	Suction piping leaks	Tighten fittings

Table 2

7.0 Disassembly-Reassembly

CAUTION

Do not proceed with removal of jet pump from connecting piping unless the jet pump has been relieved of all pressure or vacuum, has been allowed to reach ambient temperature and has been drained or purged of all fluids. Failure to follow these instructions may cause personal injury or property damage.

The jet pump Models GL and GH are made up of two parts (see Figure 3), a nozzle (61) and a body (11) which are held together by a straight right hand mechanical thread, closing the face seal between these parts.

To disassemble the unit, first attach a short piece of pipe to the suction connection as a handle, then grip the nozzle flats and rotate in a counterclockwise direction.

When ready to reassemble unit, be sure the seal face of the nozzle and body are free of foreign material and raised metal due to nicks. A non-hardening pipe seal compound may be applied to the threads to further promote sealing. Thread the body back on to the nozzle turning in a clockwise direction.

8.0 Disposal at End of Useful Life

Penberthy Jet Pumps are used in a variety of fluid applications. By following the appropriate federal and industry regulations, the user must determine the extent of preparation and treatment the Jet Pump must incur before its disposal. A Material Safety Data Sheet (MSDS) may be required before disposal services accept certain components.

Metal, glass and polymers should be recycled whenever possible. Refer to order and PV&C - Black Mountain Material Specification sheets for materials of construction.

9.0 Telephone Assistance

If you are having difficulty with your Jet Pump, contact your local Penberthy distributor.
So that we may assist you more effectively, please have as much of the following information available as possible when you call:

Model #
Name of the company from whom you purchased the Jet Pump
Invoice # and date
Process conditions (pressure, flow rates, tank shape, etc)
A brief description of the problem
Trouble shooting procedures that failed

If attempts to solve your problem fail, you may request to return your Jet Pump to the factory for intensive testing. You must obtain a Return Authorization (R.A.) number from PV&C Black Mountain before returning anything. Failure to do so will result in the unit being returned to you without being tested, freight collect. To obtain an R.A. number, the following information (in addition to that above) is needed:

Reason for return
Person to contact at your company
“Ship To” address

There is a minimum charge of $75.00 for evaluation of non-warranty units. You will be contacted before any repairs are initiated should the cost exceed the minimum charge. If you return a unit under warranty, but is not defective, the minimum charge will apply.

10.0 Exploded Parts Drawing

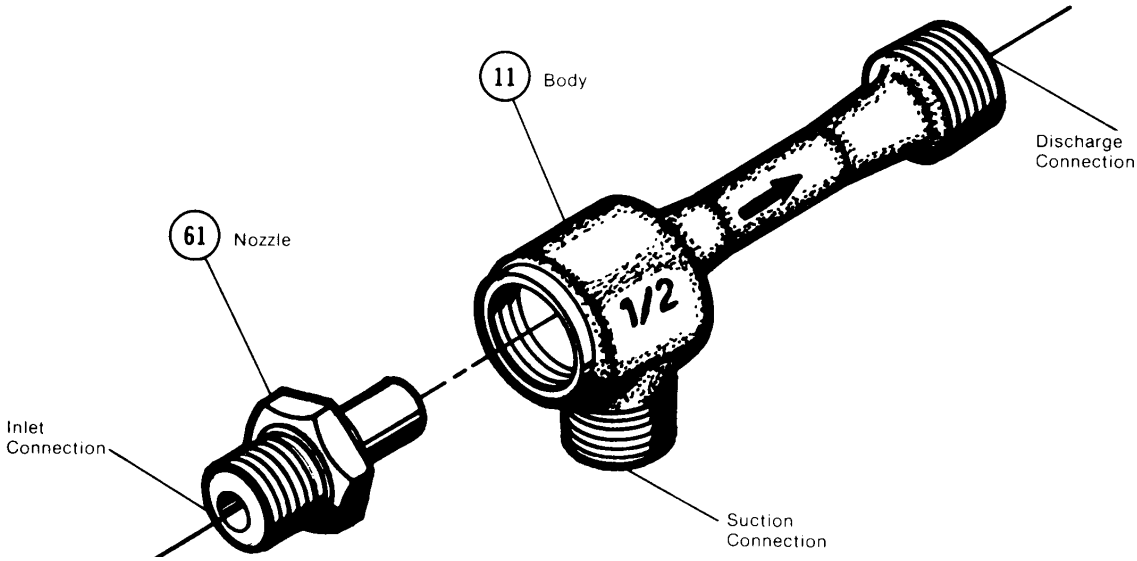

Figure 3

NOTES

Pentair Valves & Controls
953 Old U.S. Highway 70, Black Mountain, North Carolina 28711

Printed in USA
Part No. 14868-009